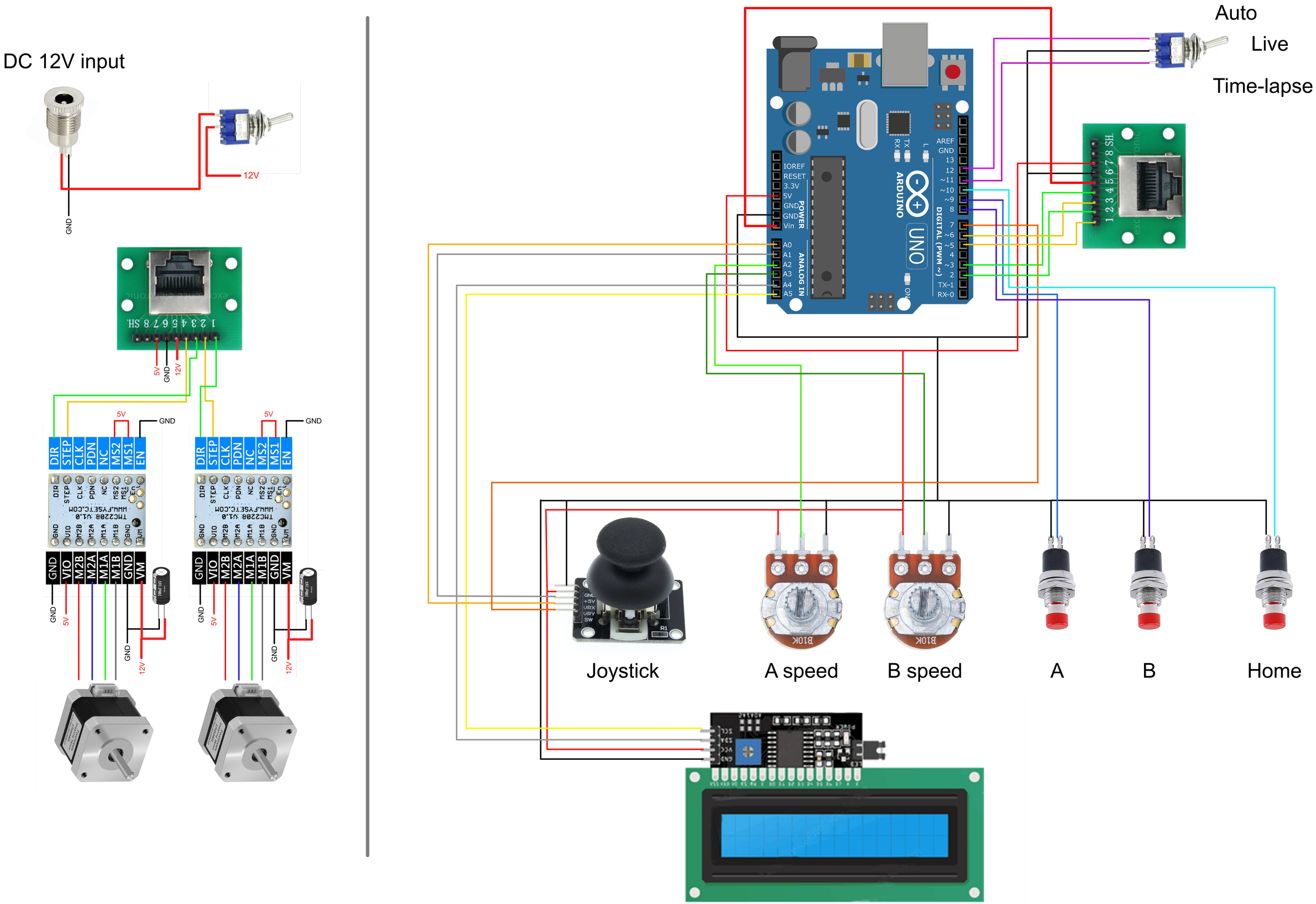
DC 12V input
12V
GND
5V
GND
12V
DIR
STEP
CLK
PDN
NC
MS2
MS1
EN
GND
VIO
M2B
M2A
M1A
M1B
GND
VM
Auto
Live
Time-lapse
Joystick
A speed
B speed
A
B
Home