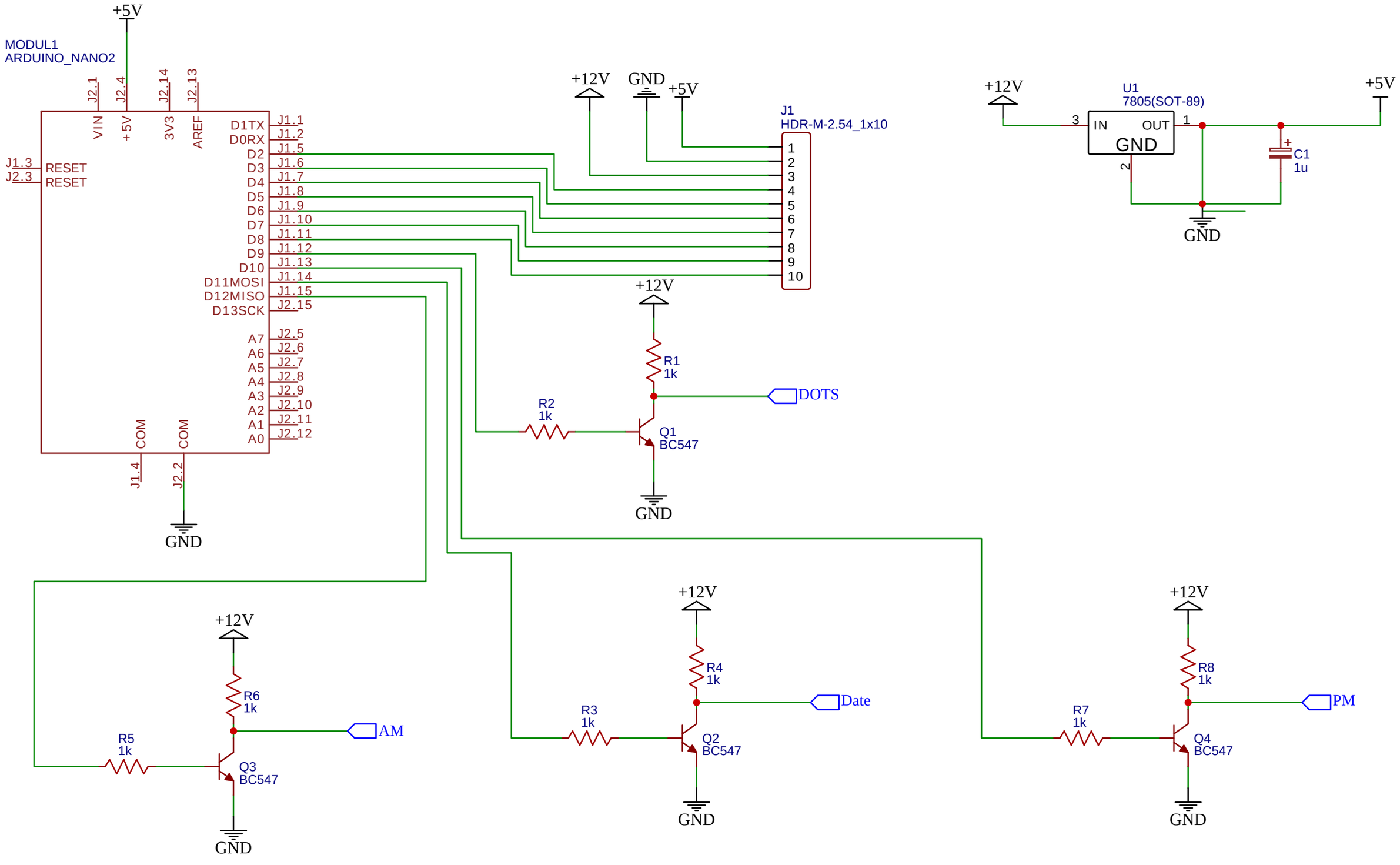
MODUL1
ARDUINO_NANO2
+5V
J2.1
J2.4
J2.14
J2.13
VIN
+5V
3V3
AREF
J1.3
J2.3
RESET
RESET
D1TX
D0RX
D2
D3
D4
D5
D6
D7
D8
D9
D10
D11MOSI
D12MISO
D13SCK
A7
A6
A5
A4
A3
A2
A1
A0
J1.1
J1.2
J1.5
J1.6
J1.7
J1.8
J1.9
J1.10
J1.11
J1.12
J1.13
J1.14
J1.15
J2.15
J2.5
J2.6
J2.7
J2.8
J2.9
J2.10
J2.11
J2.12
COM
COM
J1.4
J2.2
GND
+12V
GND
+5V
J1
HDR-M-2.54_1x10
1
2
3
4
5
6
7
8
9
10
+12V
R1
1k
DOTS
R2
1k
Q1
BC547
GND
+12V
U1
7805(SOT-89)
3
IN
OUT
1
GND
2
+5V
C1
1u
GND
+12V
R6
1k
AM
R5
1k
Q3
BC547
GND
+12V
R4
1k
Date
R3
1k
Q2
BC547
GND
+12V
R8
1k
PM
R7
1k
Q4
BC547
GND